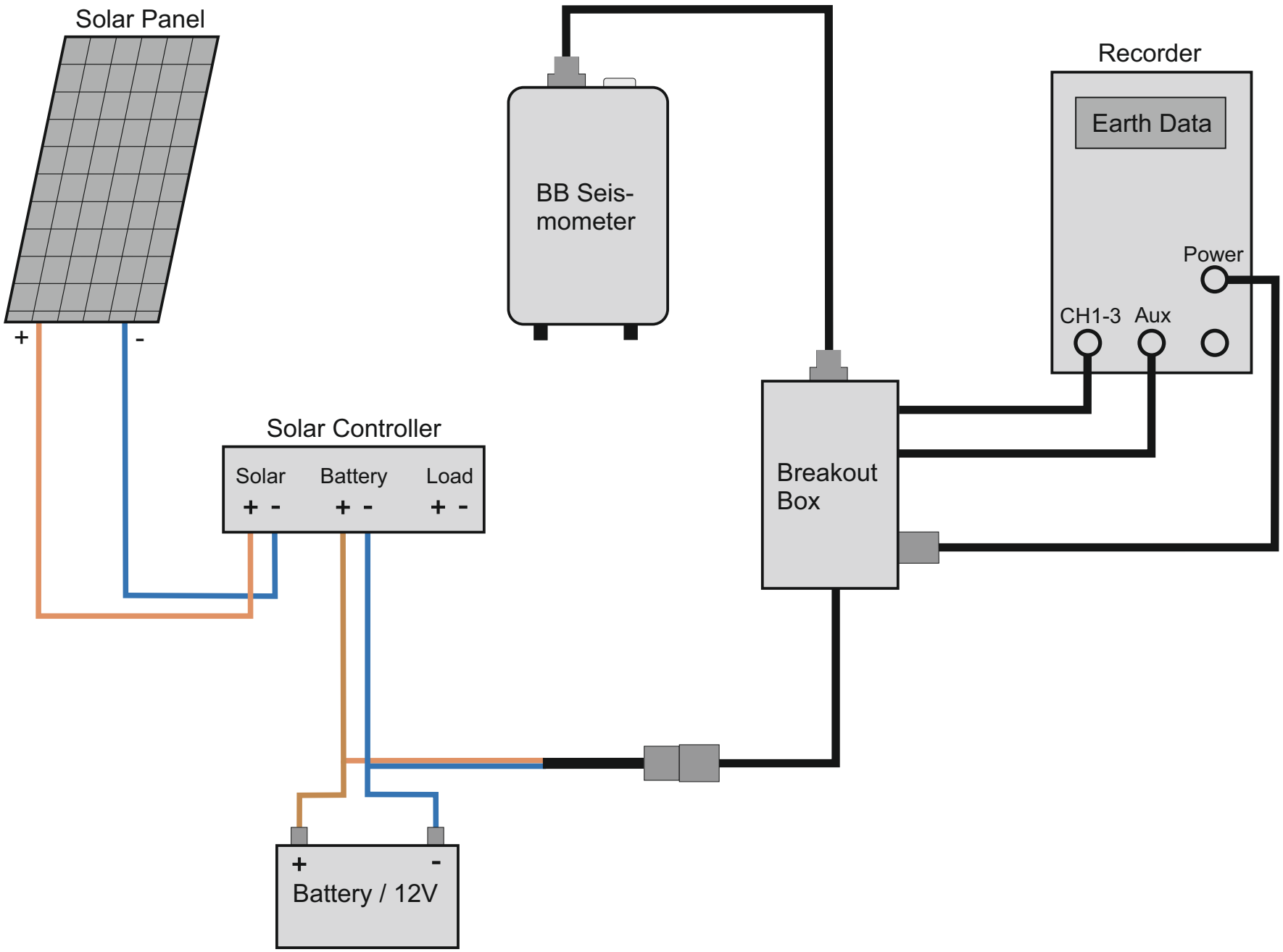
Solar Panel
+
-
BB Seis-
mometer
Recorder
Earth Data
Power
CH1-3
Aux
Solar Controller
Solar
Battery
Load
+ -
+ -
+ -
Breakout
Box
+
-
Battery / 12V